KROWNE

Model: _____ **Item #:** _____ **Date:** _____

Project: _____ **Qty:** _____ **Approved By:** _____

8" Wall Mount Center Faucets

ROYAL SERIES

14-801L

Model	Max Height (A)	Spout Height (B)	Spout Length (C)	Spout Type
14-801L	8-5/8"	5-1/4"	6"	Wide Gooseneck
14-802L	11-3/4"	7-1/2"	8-1/2"	Wide Gooseneck
14-806L	5-1/16"	2"	6"	Swing
14-808L	5-3/4"	2-3/4"	8"	Swing
14-810L	6-1/2"	3-1/2"	10"	Swing
14-812L	6-1/2"	3-1/8"	12"	Swing
14-814L	8"	5"	14"	Swing
14-816L	8-3/4"	5-3/4"	16"	Swing
14-818L	8"	5"	6"	Joint
14-824L	9-1/2"	6-1/8"	12"	Joint
14-8XXL	-	-	-	None

Product Compliance

- NSF-61 & NSF/ANSI 372
- NSF/ANSI/CAN 61: Q < 1
- ASME A112.18.1-2011/CSA B125.1-11 & NSF/ANSI 372
- Meets ANSI A117.1 (ADA)
- CEC Listed
- Massachusetts Approved

Standard Features

- Center wall mounted
- 1/4 turn high performance ceramic valves
- Lever handles (vandal resistance wristblade handles available)
- Durable full range swing spout with double o-ring construction
- Mounting kit (21-194L): Includes (2) 1/2" NPS x 1-1/2" brass nipples, (2) lock nuts, (2) rosette washers and (2) rubber gaskets
- Hot and Cold color indicators

Specifications

Water Inlet	1/2" NPS Male, Kit Installed
Temp. Range	40°F - 180°F
Rough In	7/8" Round Holes on 8" Center
Flow Rate	1.8 GPM
Material	Chrome Plated Brass
Weight	6 lbs.

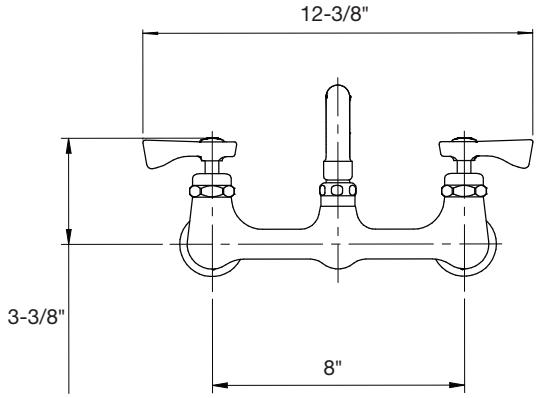

Front View

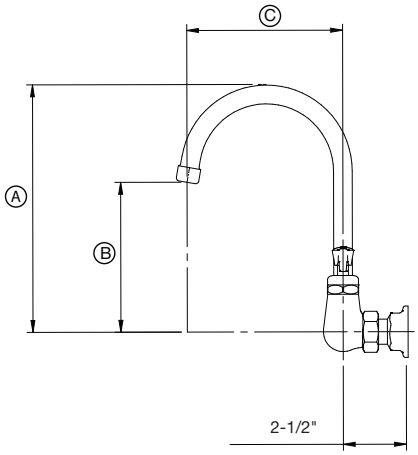

Warning:
Plumbing connections should be made by qualified personnel who will observe all applicable plumbing, sanitary and safety codes

California Prop 65 Warning:
This product can expose you to chemicals including lead and lead compounds, which are known to the State of California to cause cancer and birth defects or other reproductive harm. For more information go to www.P65Warnings.ca.gov.

Krowne • 100 Haul Rd. Wayne, NJ 07470 • P: (800) 631-0442 • F: (973) 872-1129 • support@krowne.com • krowne.com

Due to our commitment to continued product improvement, specifications are subject to change without notice.

KROWNE®

Model: _____ **Item #:** _____ **Date:** _____

Project: _____ **Qty:** _____ **Approved By:** _____

8" Wall Mount Center Faucets

ROYAL SERIES

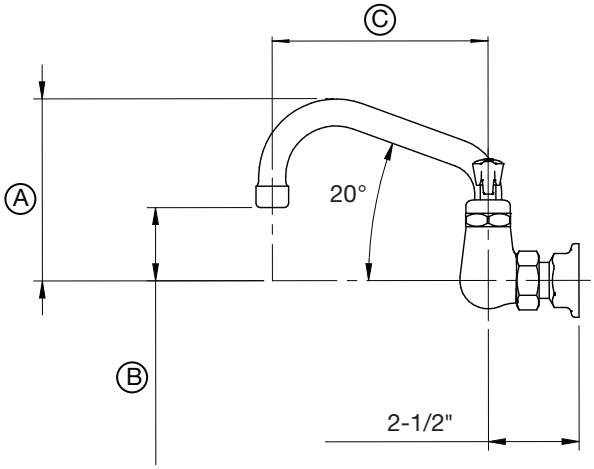

14-806L

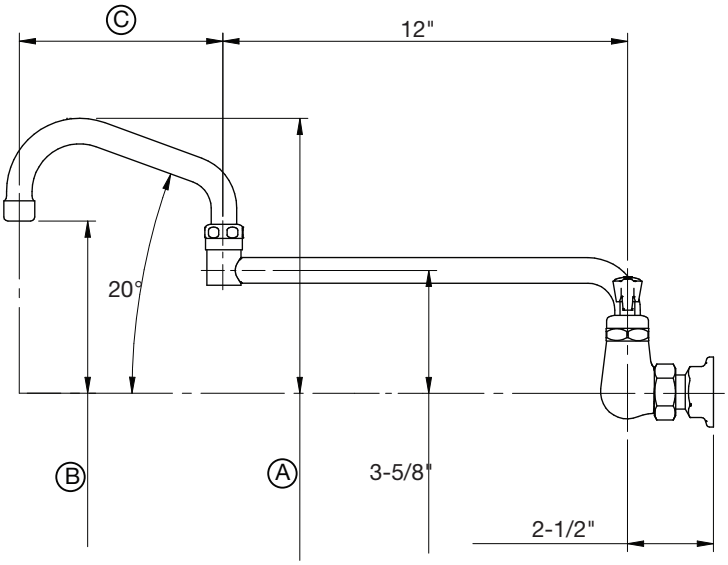

14-824L

Warning:
Plumbing connections should be made by qualified personnel who will observe all applicable plumbing, sanitary and safety codes

California Prop 65 Warning:
This product can expose you to chemicals including lead and lead compounds, which are known to the State of California to cause cancer and birth defects or other reproductive harm. For more information go to www.P65Warnings.ca.gov.

Krowne • 100 Haul Rd. Wayne, NJ 07470 • P: (800) 631-0442 • F: (973) 872-1129 • support@krowne.com • krowne.com

Due to our commitment to continued product improvement, specifications are subject to change without notice.