KROWNE®

**Model:** _____ **Item #:** _____ **Date:** _____

**Project:** _____ **Qty:** _____ **Approved By:** _____

# Drop-In Bar Top Drainer

ROYAL SERIES

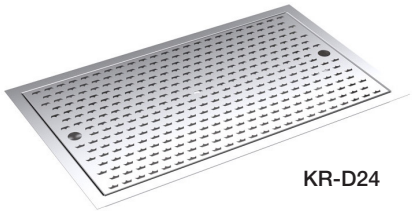

KR-D24

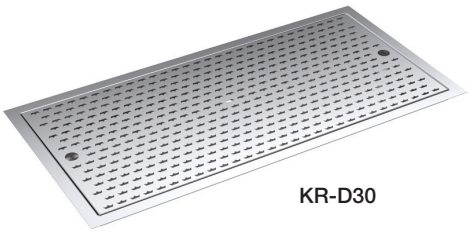

KR-D30

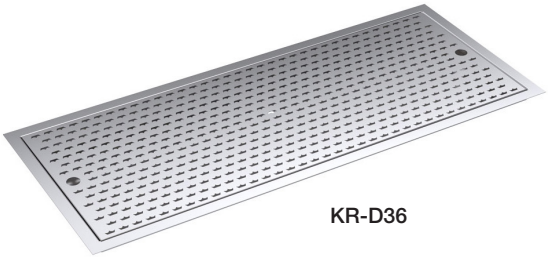

KR-D36

## Standard Features

- 24"L x 14" front to back depth
- 22" x 12" cutout
- Removable 20 gauge stainless steel perforated top
- Perforated interior allows liquid to feed towards drain
- 20 gauge stainless steel pan
- 1" drain included (23-126)

| Model | Length (A) | Inside Dimensions | Left Side to Drain (B) | Weight |
|---|---|---|---|---|
| **KR-D24** | 24" | 11-3/4" x 21-3/4" | 12" | 12 lbs. |
| **KR-D30** | 30" | 11-3/4" x 27-3/4" | 15" | 14 lbs. |
| **KR-D36** | 36" | 11-3/4" x 33-3/4" | 18" | 16 lbs. |

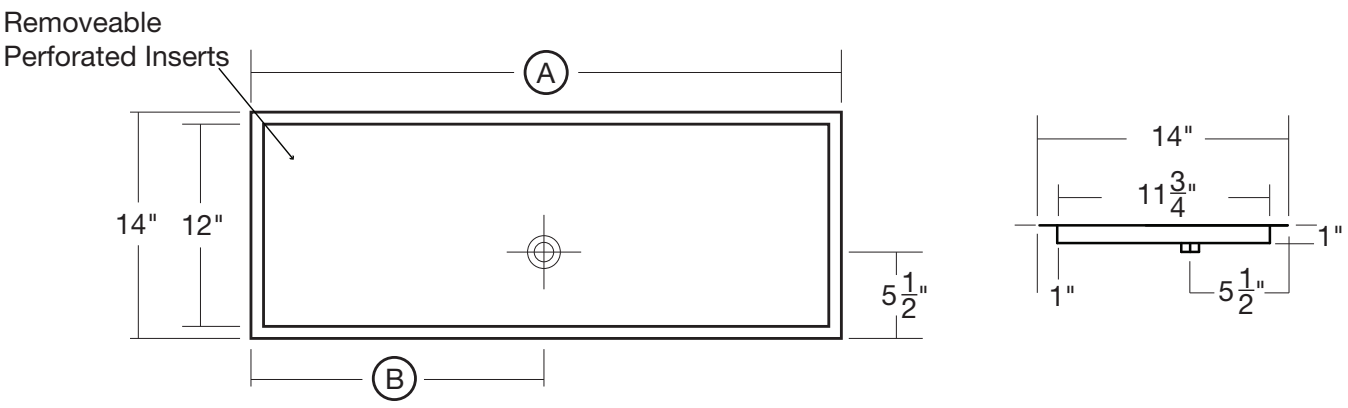


**Mechanical Requirements:** 1-1/2" IPS drain connection

Krowne • 100 Haul Rd. Wayne, NJ 07470 • P: (800) 631-0442 • F: (973) 872-1129 • support@krowne.com • krowne.com

Due to our commitment to continued product improvement, specifications are subject to change without notice.